YXD-28TFTB-2D2

240(RGB) x 320 RGB Stripe
α-Si TFT,2.8″ Diagonal

1.0 DIMENSIONAL DRAWING

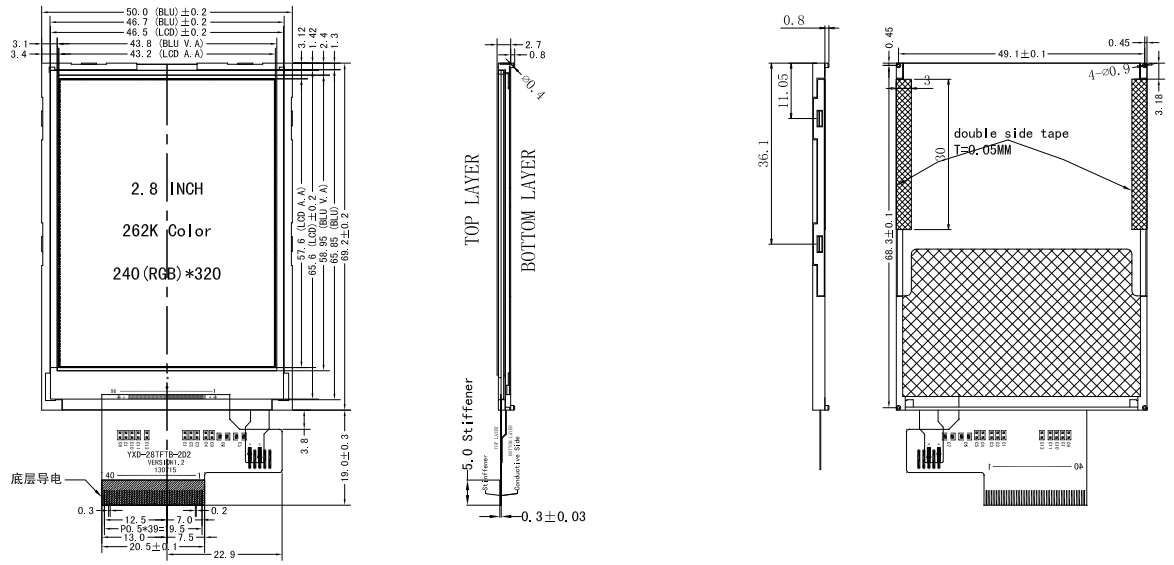

2.0 BLOCK DIAGRAM & POWER SUPPLY

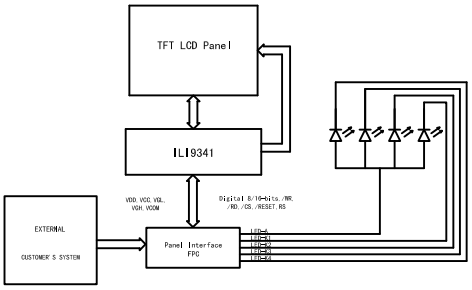

背光电路图CIRCUIT DIAGRAM(LED SMD 4 X 1 = 1 dies)

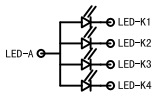

3.0 MECHANICAL SPECIFICATIONS & FEATURE

Item	Nominal Dimensions(mm)	Feature	
		Active Screen Size	2.8″ Diagonal
Module Size(W*H*T)	50.0 × 69.2 × 2.7	Resolution	240(RGB)×320
Active Area(W*H)	43.2 × 57.6	View Angle	6 O'clock
Dot × Dot(W*H)	240(RGB) × 320	Pixel Driving Element	α-Si TFT
Dot Pitch(W*H)	---	Pixel Arrangement	RGB Vertical Stripe
Dot Size(W*H)	0.180 × 0.180	Driving IC	ILI9341
---	---	Operating Temperature	-20° C to +70° C
---	---	Storage Temperature	-30° C to +80° C

4.0 ELECTRICAL CHARACTERISTICS

Item	Symbol	Test Condition	Min.	Typ.	Max.	Unit
Supply Voltage	VDDI(IOVCC)	Based On ILI9341 Ta=25° C	1.65	---	3.3	V
Analog Supply Voltage	VCI	Based On ILI9341 Ta=25° C	2.5	---	4.8	V
Supply Voltage & Analog Supply Voltage	VDDI(IOVCC)&VCI	Based On ILI9341 Ta=25° C	2.5	---	3.3	V
TFT Gate ON Voltage	VGH	Based On ILI9341 Ta=25° C	9.0	15.0	16.5	V
TFT Gate Off Voltage	VGL	Based On ILI9341 Ta=25° C	-6.0	-10.0	-13.5	V
TFT Common Electrode Voltage	VcomH	Based On ILI9341 Ta=25° C	2.5	---	5.8	V
	VcomL	Based On ILI9341 Ta=25° C	-2.5	---	0	V

5.0 INTERFACE PIN CONNECTIONS

Pin No.	Symbol	Level	Description
1	LED-K(LED-)	0V	LED Backlight Kathode Input Terminal
2	LED-A(LED+)	3.2V(Type)	LED Backlight Anode Input Terminal
3	/RESET	H→L,H	LCM reset pin.internal pull high.connected to VDD when not used
4	VSYNC		Frame synchronizing signal for RGB interface operation.
5	HSYNC		Line synchronizing signal for RGB interface operation.
6	DOTCLK		Dot clock signal for RGB interface operation.
7	DE		Data enable signal for RGB interface operation.
8-25	DB17-DB0		Data Bus DB17-DB0 Input Terminal
26	SDO		
27	SDI		
28	/RD	L	LCM Read Signal Input Terminal
29	DCX(SCL)	H/L	LCM Data/Command (CLK@3-wire 9-bit) Selection Terminal
30	WRX(DCX)	---	————————————————————
31	/CS	L	LCM selection pin for serial interface;internal pull high
32	NC	---	Not Connected
33	IOVCC	1.65-3.3V	LCM Power Supply(Digital Voltage & Analog voltage) Input Terminal
34-35	VCI	2.5-3.3V	LCM Power Supply(Digital Voltage & Analog voltage) Input Terminal
36	VSS	0V	LCM Powper Supply Ground Input Terminal
37-40	NC	---	Not Connected